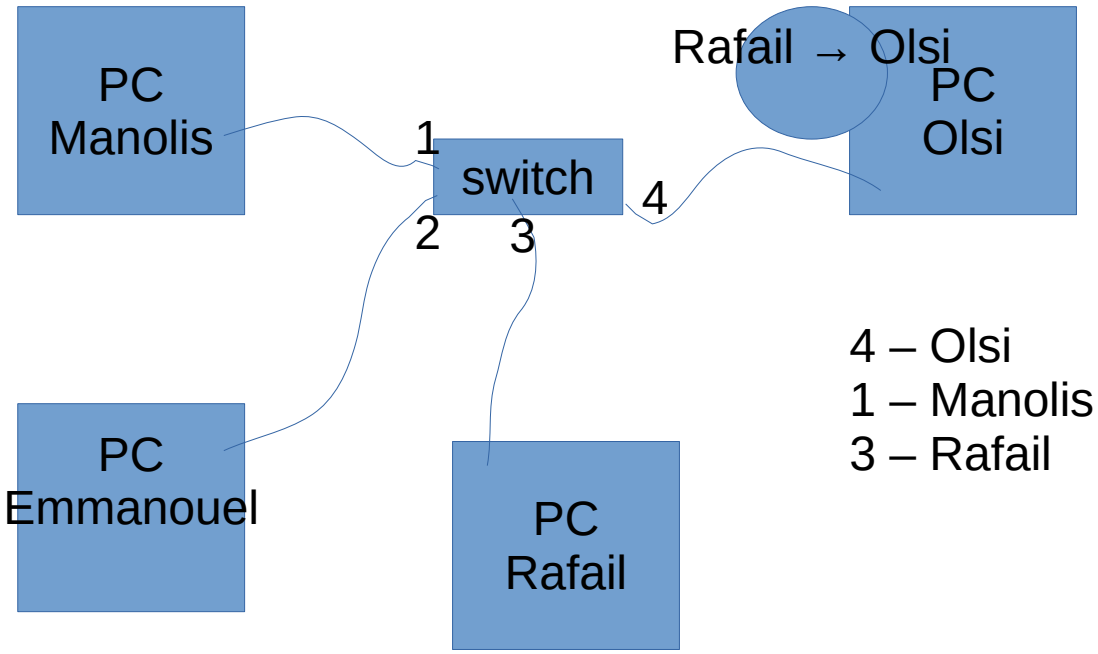
PC
Manolis
1
switch
2
3
4
Rafail → Olsi
PC
Olsi
PC
Emmanouel
PC
Rafail
4 – Olsi
1 – Manolis
3 – Rafail

Google